Generated by Foxit PDF Creator © Foxit Software
http://www.foxitsoftware.com For evaluation only.

MRB-1112
Rounded Reception
With Modera Workstation
5-series panel

MRTG-1112
Trigonal Shape reception
With Modera Workstation
3-series panel

MRFP-1118
Elegan Reception table
With Modera Workstation
3 series

Generated by Foxit PDF Creator © Foxit Software
http://www.foxitsoftware.com For evaluation only.

MRPF-1120

MRBC-1130

Podium **table**

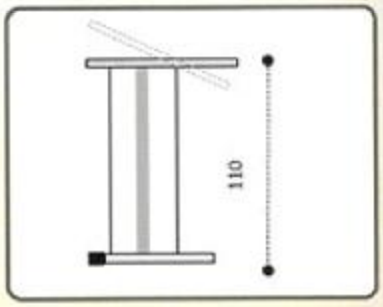

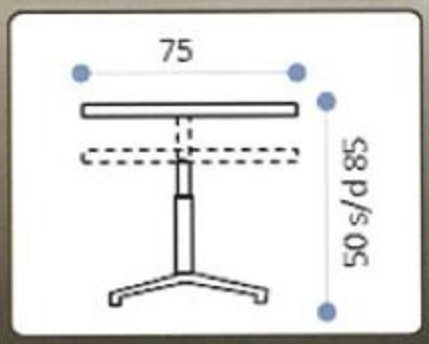

Coffe **table**

Generated by Foxit PDF Creator © Foxit Software
http://www.foxitsoftware.com For evaluation only.

Reception Desk Specification

RECEPTION FURNITURE

FIGUR | DIMENTION | SPESIFICATION

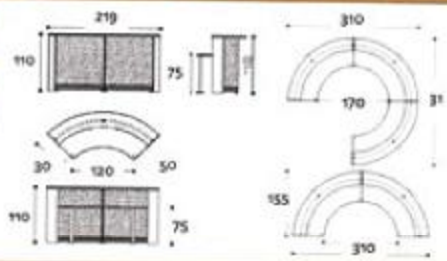

MRB-1112

Rounded Reception
With Modera Workstation
5-series panel

Exclude : Chair

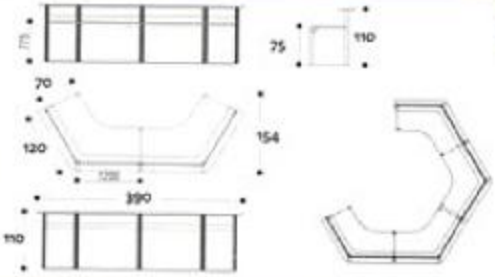

MRTG-1112

Trigonal Shape reception
With Modera Workstation
3-Series Panel

Exclude : Chair

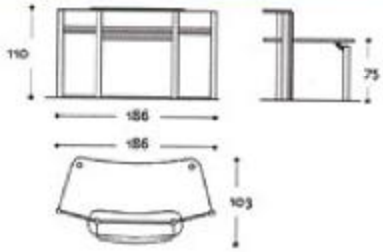

MRFP-1118

Elegan Reception table
With Modera Workstation
3-series.

Exclude : Chair

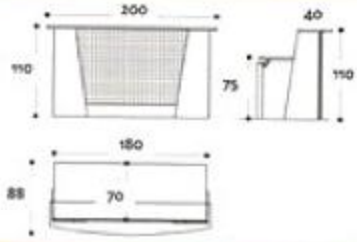

MRPF-1120

Reception Table

Exclude : Chair

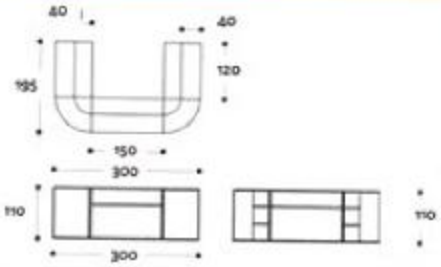

MRBC-1130

Reception Table

Exclude : Chair and cabinet

PODIUM SPESIFICATION

PT-1160

COFFE TABLE SPESIFICATION

CTRA-7585

Generated by Foxit PDF Creator © Foxit Software
http://www.foxitsoftware.com For evaluation only.

Pedestal for Workstation

FIGURE	DESCRIPTION	DIMENTION (CM)			COLOR			
		W	D	H	BEECH	MAPLE	CHERRY	GREY
	Extension Pedestal For 50 Width table with Two filling Drawers	50	50	75	MWEFC 2402-5B	MWBFC 282-5M	MWCFC 282-5C	MWFC 682-5G
	Extension Pedestal For 70 Width table with Two filling Drawers	50	70	75	MWEFC 2402-7B	MWBFC 282-7M	MWCFC 282-7C	MWFC 682-7G
	Extension Pedestal For 50 Width table with Two Drawers and one filling drawer	50	50	75	-	MWBXT 5501-M	-	-
	Extension Pedestal For 70 Width table with Two Drawers and one filling drawer	50	70	75	-	MWBFC 7401-M	-	-
	Extension Pedestal For 50 Width table with four Drawers	50	50	75	MWEFD 2404-5B	MWBFD 2404-5M	MWCFD 2404-5C	MWFD 2404-5G
	Extension Pedestal For 70 Width table with four Drawers	50	70	75	MWEFD 2404-7B	MWBFD 2404-7M	MWCFD 2404-7C	MWFD 2404-7G
	Extension Pedestal for 50 width table for CPU and CD with one drawer	50	50	75	-	MWBXT 5502-5M	-	-
	Extension Pedestal for 70 width table for CPU and CD with one drawer	50	70	75	-	MWBXT 5502-7M	-	-
	Mobile drawer with three Drawers	40	47	59	MWEMD 3331-B	-	-	-
		41	52	56	-	MWBMD 7331-M	-	-
		40	48	58	-	-	MWCMD 338-C	-
		40	48	59	-	-	-	MWMD 331-G
	Mobile drawer with one Drawer and one filling drawer	48	52	56	-	MWBMD 7332-M	-	-
		48	48	58	-	-	MWCMD 328-C	-
		46	48	59	-	-	-	MWMD 332-G
	Mobile drawer with two Drawers and one filling drawer	48	48	62	MWEMD 2133-B		-	-
		48	52	65	-	MWBMD 7133-M	-	-
	CPU rack With roller	25	50	15	MWCR 5025-B	MWCR 5025-M	MWCR 5025-C	MWCR 5025-G
	Extension Cabinet	50	40	75	MWEC 5075-B	MWEC 5075-M	MWEC 5075-C	MWEC 5075-G
		70			MWEC 7075-B	MWEC 7075-M	MWEC 7075-C	MWEC 7075-G

Generated by Foxit PDF Creator © Foxit Software
http://www.foxitsoftware.com For evaluation only.

TOP TABLE *Specification*

WIDTH (W)		LONG (L)									
		50	60	70	80	90	120	140	150	160	180
70	TABLE TOP	MW-TT 5070	MW-TT 6070	MW-TT 7070	MW-TT 8070	MW-TT 9070	MW-TT 1270	MW-TT 1470	MW-TT 1570	MW-TT 1670	MW-TT 1770
50	SIDE TABLE TOP	MW-ST 5050	MW-ST 6050	MW-ST 7050	MW-ST 8050	MW-ST 9050	-	-	-	-	-
30	RECEPTION TOP	-	-	-	-	-	MW-MR 1230	MW-MR 1430	MW-MR 1530	MW-MR 1630	MW-MR 1830

120	160	180	
	MW-LW 1612	MW-LW 1812	
120	120		
	MW-TR 1212		
120	120		
	MW-TL 1212		
	120	140	
	MW-TW 1275	MW-TW 1475	
120	120		
	MW-TW 1212		
120	160	180	
	MW-LS 1612	MW-LS 1812	

	80	90	120
80	MW-Q 8080	-	-
90	-	MW-Q 9090	-
120	-	-	MW-Q 1212

	80	90	120
50	MW-SR 8050	MW-SR 9050	-
70	-	-	MW-SR 1270

	80	90	120
50	MW-SS 8050	MW-SS 9050	-
70	-	-	MW-SS 1270

JOINT TABLE	FOR MWF L =145	FOR MWT L =143
a = 70	MWF-JT 1470	MWT-JT 1470

JOINT TABLE	FOR MWF		FOR MWT	
	LONG (L)			
	145	143	105	103
37 (a=70)	MWF-JT 1437	MWT-JT 1437	-	-
27 (a=50)	-	-	MWF-JT 1427	MWT-JT 1427

JOINT TABLE	70	50
35	MW-JT 7035	-
25	-	MW-JT 5025

For Color Choise : Please Add Color code after you Write top Table Code :

COLOR CODE
B = BEECH
M = MAPLE
C = CERRY
G = GREY
BC = BLACK
DG = DARKGREY

EXAMPLE :
MW-TT 5070 **B**

For ideal Matching between top Table and Joint Table, Follow Table bellow.

JOINT TABLE COLOR	BLACK	MAPLE OR DARK GREY	GREY OR DARKGREY
TOP TABLE COLOR	BEECH AND CHERRY	MAPLE	GREY